II.1 Introduction to Model Order Reduction *via Krylov Subspace Projection*

Linear dynamical systems

Continuous, time-invariant, MIMO

$$\begin{aligned} \mathbf{C}\dot{\mathbf{x}}(t) + \mathbf{G}\mathbf{x}(t) &= \mathbf{B}\,\mathbf{u}(t), \\ \mathbf{y}(t) &= \mathbf{L}^T\mathbf{x}(t), \end{aligned}$$

with $\mathbf{x}(0) = \mathbf{x}_0$, where

$\mathbf{x}(t) \in \mathbf{R}^{N\times 1}$:	state variables N
	state-space dimension
$\mathbf{C}, \mathbf{G} \in \mathbf{R}^{N\times N}$	system matrices
$\mathbf{B} \in \mathbf{R}^{N\times m}$:	input influence arrays
$\mathbf{L} \in \mathbf{R}^{N\times p}$:	output influence arrays
$\mathbf{u}(t) \in \mathbf{R}^{m\times 1}$:	inputs
$\mathbf{y}(t) \in \mathbf{R}^{p\times 1}$:	outputs

Remarks

Assume that the pencil $\lambda\mathbf{C} + \mathbf{G}$ is regular, i.e.,

$$\det(\lambda\mathbf{C} + \mathbf{G}) \not\equiv 0.$$

Important special cases:

- $\mathbf{C}^{\mathrm{T}} = \mathbf{C}$ and $\mathbf{G}^{\mathrm{T}} = \mathbf{G}$, indefinite.

  e.g., RLC systems,

  linearization of symmetric quadratic systems

- $\mathbf{C}^{\mathrm{T}} = \mathbf{C} \geq 0$ and $\mathbf{G}^{\mathrm{T}} = \mathbf{G} \geq 0$.

  e.g., RC systems, Mass-stiffness systems

Sources of linear systems

- Semi-discretization of PDEs
- Small-signal analysis of nonlinear systems
- Nonlinear systems with large linear subsystems

Linear dynamical systems in frequency domain

- By taking Laplace transform

$$F(s) = \mathcal{L}\{f(t)\} = \int_{0+}^{\infty} f(t)e^{-st}dt,$$

we have

$$\begin{aligned} s\mathbf{C}\mathbf{X}(s) &= -\mathbf{G}\mathbf{X}(s) + \mathbf{B}\,\mathbf{U}(s) \\ \mathbf{Y}(s) &= \mathbf{L}^T\mathbf{X}(s) \end{aligned}$$

where

$$\{\mathbf{X}(s), \mathbf{Y}(s), \mathbf{U}(s)\} = \mathcal{L}\{\mathbf{x}(t), \mathbf{y}(t), \mathbf{u}(t)\}$$

and assume $\mathbf{x}(0+) = \mathbf{x}_0 = 0$.

- The ratio of the output $\mathbf{Y}(s)$ to the input $\mathbf{U}(s)$ is given by the *transfer (matrix) function*

$$\mathbf{H}(s) = \mathbf{L}^T(\mathbf{G} + s\mathbf{C})^{-1}\mathbf{B}$$

Computational tasks

- Steady-state analysis

  the steady-state response of a system to a sinusoidal input signal (or periodic excitation).

- Transient analysis

  the response of a system as a function of time

- Sensitivity analysis

  the proportional change of a system to a proportional change in the system parameters.

Computational challenges

- Large state-space dimension $N \sim \mathcal{O}(10^6)$
- Stiffness (multi-energy domain, multi-scaling, ...)

  Time integration step δt may be required as small as $O(10^{-6})$ sec.

Eigensystem analysis of transfer function

For simplicity, let us only consider the SISO system; $p = m = 1$.

- To compute $H(s)$ around an expansion point s_0, let $s = s_0 + \sigma$. Then
$$H(s) = H(s_0 + \sigma) = \mathbf{l}^T(\mathbf{I} - \sigma\mathbf{A})^{-1}\mathbf{r}$$
where
$$\mathbf{A} = -(\mathbf{G} + s_0\mathbf{C})^{-1}\mathbf{C}, \qquad \mathbf{r} = (\mathbf{G} + s_0\mathbf{C})^{-1}\mathbf{b}.$$
- Eigendecomposition of $\mathbf{A}$:
$$\mathbf{A} = \mathbf{S}\,\Lambda\,\mathbf{S}^{-1} = \mathbf{S} \cdot \mathrm{diag}(\lambda_1, \lambda_2, \ldots, \lambda_N) \cdot \mathbf{S}^{-1}$$
- Pole-residue representation
$$H(s_0 + \sigma) = \mathbf{f}^T(\mathbf{I} - \sigma\Lambda)^{-1}\mathbf{g} = \rho_\infty + \sum_{\lambda_j \neq 0} \frac{\kappa_j}{\sigma - p_j}.$$
where $p_j = s_0 + \frac{1}{\lambda_j}$ are **poles**, $\kappa_j = -\frac{f_j g_j}{\lambda_j}$ are **residues**, and $\mathbf{f} = \mathbf{S}^T\mathbf{l} = (f_j)$ and $\mathbf{g} = \mathbf{S}^{-1}\mathbf{r} = (g_j)$.

- *In practice, A is either too ill-conditioned or too large to compute its full eigendecomposition!*

Eigensystem analysis of transfer function

Alternative "direct" methods (for example):

- Let $\mathbf{A} = \mathbf{Q}\mathbf{T}\mathbf{Q}^T$ be the Schur decomposition. Then

$$H(s) = \mathbf{l}^T(\mathbf{I} - \sigma\mathbf{A})^{-1}\mathbf{r} = (\mathbf{Q}^T\mathbf{l})^T(\mathbf{I} - \sigma\mathbf{T})^{-1}(\mathbf{Q}^T\mathbf{r})$$

$\Rightarrow$ *only suitable for small systems*

Approximation (for example):

- Use partial eigen-decomposition

  With harmonic excitation $\mathbf{B}\mathbf{u}(t) = \mathbf{P}(\omega)e^{i\omega t}$, one may assume a harmonic solution of the form $\mathbf{x}(t) = \mathbf{Q}_k\mathbf{v}(\omega)e^{i\omega t}$. Then solve

$$\left[i\omega\mathbf{Q}_k^T\mathbf{C}\mathbf{Q}_k + \mathbf{Q}_k^T\mathbf{G}\mathbf{Q}_k\right]\mathbf{v}(\omega) = \mathbf{Q}_k^T\mathbf{P}(\omega) \quad \text{for} \quad \mathbf{v}(\omega).$$

  $\mathbf{Q}_k$ are selected mode shapes (eigenvectors), lie within the range of forcing frequencies (*dominant poles/modes*)

  $\Rightarrow$ *Modal superposition method (AMLS, AS, ...)*

Reudced-order modeling (ROM)

Goals:

- Replace the original system by a system of the same type but with *much smaller* state-space dimension
- Represent *a meaningful approximation* of the original system
- Preserve *essential properties* of the original system.

Applications:

- Efficient *analysis* and *synthesis* of a large scale dynamical system.

Reudced-order modeling (ROM), cont'

Specifically, given a linear system, we want to

Find a new linear system of the same form

$$\begin{aligned} \mathbf{C}_n \dot{\mathbf{z}}(t) + \mathbf{G}_n \mathbf{z}(t) &= \mathbf{B}_n \, \mathbf{u}(t), \\ \tilde{\mathbf{y}}(t) &= \mathbf{L}_n^T \mathbf{z}(t), \end{aligned}$$

where

$\mathbf{C}_n, \mathbf{G}_n \in \mathbf{R}^{n \times n}$

$\mathbf{z}(t) \in \mathbf{R}^{n \times 1}$

$\mathbf{B}_n \in \mathbf{R}^{n \times m}$, $\mathbf{L}_n \in \mathbf{R}^{n \times p}$,

$\mathbf{u}(t) \in \mathbf{R}^{m \times 1}$: *inputs* (m)

$\tilde{\mathbf{y}}(t) \in \mathbf{R}^{p \times 1}$: *outputs* (p)

such that

- $n \ll N$
- $\|\mathbf{y}(t) - \tilde{\mathbf{y}}(t)\| \leq \epsilon$ *for* $\mathbf{u} \in \mathcal{F}, t \in [t_0, t_1]$

ROM in frequency domain

The transfer function of the reduced-order model is of the form:

$$\mathbf{H}_n(s) = \mathbf{L}_n^T(\mathbf{G}_n + s\mathbf{C}_n)^{-1}\mathbf{B}_n$$

Therefore, in the frequency domain, our *objective* is to ask

$$\|\mathbf{H}(s) - \mathbf{H}_n(s)\| \leq \epsilon$$

over the frequency range of interest, and

$$n \ll N$$

An illustrative simple example

A simple RLC network `[Chiprout & Nakhla'94]`

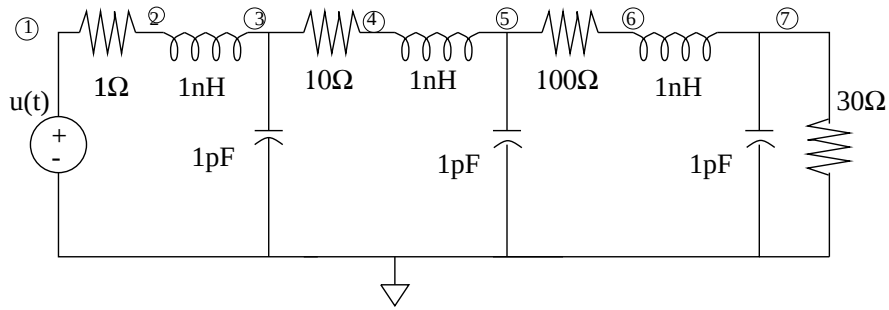

Modified nodal admittance formulation (Kirchoff's laws) yields

$$\begin{aligned} \mathbf{C}\dot{\mathbf{x}}(t) + \mathbf{G}\mathbf{x}(t) &= \mathbf{B}\,\mathbf{u}(t), \\ \mathbf{y}(t) &= \mathbf{L}^T\mathbf{x}(t), \end{aligned}$$

where $\mathbf{x}(t)$: 11×1, $\mathbf{C}$ and $\mathbf{G}$: 11×11, $\mathbf{B} = \mathbf{e}_8$, $\mathbf{L} = \mathbf{e}_7$, and $\mathbf{u}(t)$:

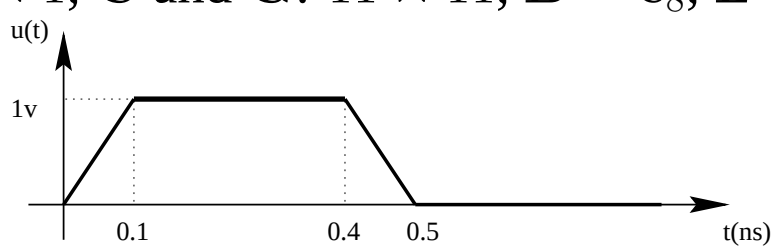

```
G=[ 1 -1    0    0     0     0      0 1  0  0  0;
   -1  1    0    0     0     0      0 0  1  0  0;
    0  0  0.1 -0.1     0     0      0 0 -1  0  0;
    0  0 -0.1  0.1     0     0      0 0  0  1  0;
    0  0    0    0  0.01 -0.01      0 0  0 -1  0;
    0  0    0    0 -0.01  0.01      0 0  0  0  1;
    0  0    0    0     0     0 0.0333 0  0  0 -1;
    1  0    0    0     0     0      0 0  0  0  0;
    0  1   -1    0     0     0      0 0  0  0  0;
    0  0    0    1    -1     0      0 0  0  0  0;
    0  0    0    0     0     1     -1 0  0  0  0];
```

```
C=[ 0 0     0 0     0 0     0 0     0     0     0;
    0 0     0 0     0 0     0 0     0     0     0;
    0 0 1e-12 0     0 0     0 0     0     0     0;
    0 0     0 0     0 0     0 0     0     0     0;
    0 0     0 0 1e-12 0     0 0     0     0     0;
    0 0     0 0     0 0     0 0     0     0     0;
    0 0     0 0     0 0 1e-12 0     0     0     0;
    0 0     0 0     0 0     0 0     0     0     0;
    0 0     0 0     0 0     0 0 -1e-9     0     0;
    0 0     0 0     0 0     0 0     0 -1e-9     0;
    0 0     0 0     0 0     0 0     0     0 -1e-9];
```

```
L=[0 ; 0 ; 0 ; 0 ; 0 ; 0 ; 1 ; 0 ; 0 ; 0 ; 0];

B=[0 ; 0 ; 0 ; 0 ; 0 ; 0 ; 0 ; 1 ; 0 ; 0 ; 0];
```

An illustrative simple example, cont'

Frequency responses $H(s)$, $H_2(s)$, $H_4(s)$, $H_6(s)$

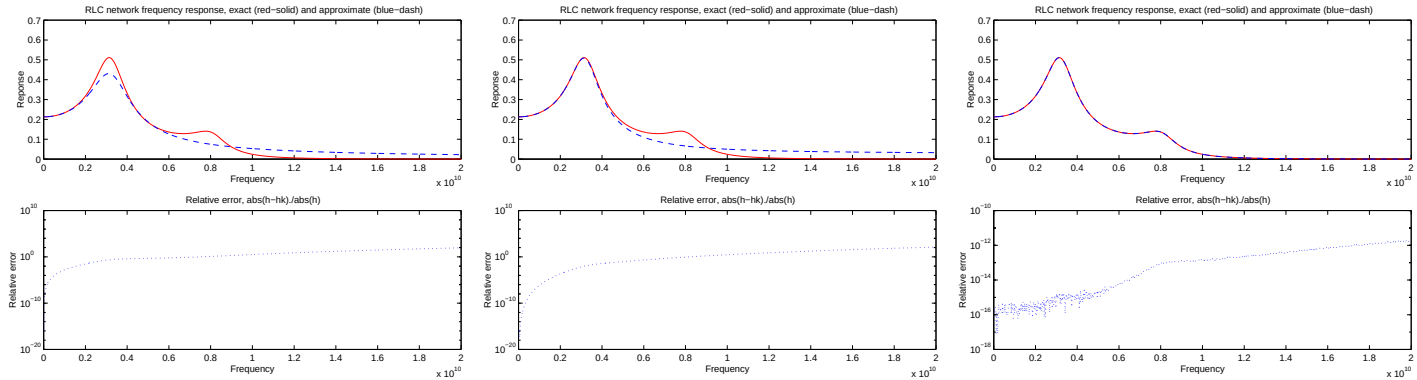

An illustrative simple example, cont'

Transient responses $y(t)$, $\tilde{y}_2(t)$, $\tilde{y}_4(t)$, $\tilde{y}_6(t)$:

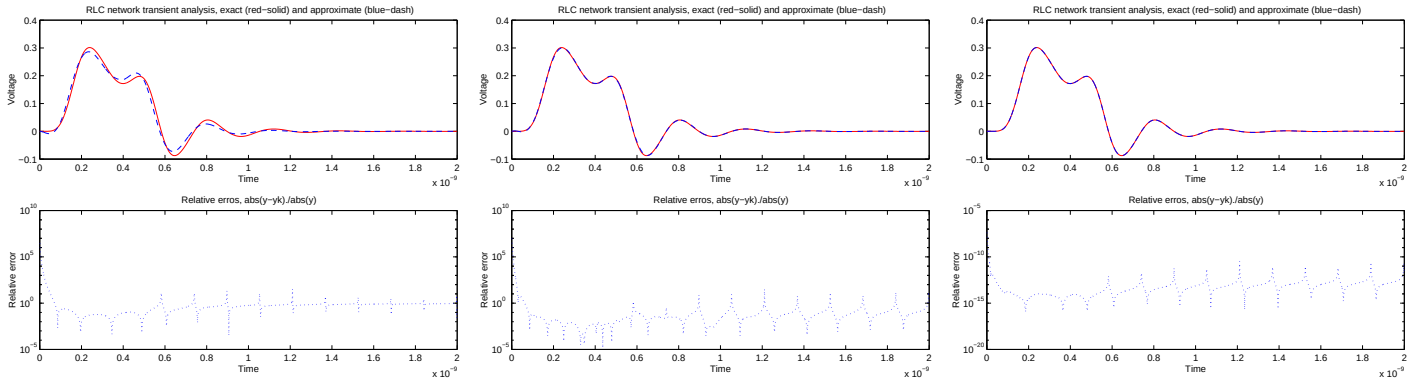

Classification of MOR methods

1. SVD-based methods

   Balanced truncation

   Hankel-norm approximation

   Proper orthogonal decomposition

2. Krylov-based methods

   explicit moment-matching

   moment-matching via Krylov subspace projection

3. SVD-Krylov methods

   iterative methof for approximate balance trunction ...

Padé approximation and moment-matching

- Since $H(s_0+\sigma)$ is a rational function, it may be best approximated by Padé approximation:

$$H_n(s_0+\sigma) = \frac{P_{n-1}(\sigma)}{Q_n(\sigma)} \equiv \frac{a_{n-1}\sigma^{n-1} + \cdots + a_1\sigma + a_0}{b_n\sigma^n + b_{n-1}\sigma^{n-1} + \cdots + b_1\sigma + 1}$$

- The coefficients $\{a_j\}$ and $\{b_j\}$ are uniquely determined by the first $2n$ Taylor coefficients of $H(s_0+\sigma)$:

$$\begin{aligned} H(s_0+\sigma) &= \mathbf{l}^T(\mathbf{I}-\sigma\mathbf{A})^{-1}\mathbf{r} \\ &= \mathbf{l}^T\mathbf{r} + (\mathbf{l}^T\mathbf{A}\mathbf{r})\sigma + (\mathbf{l}^T\mathbf{A}^2\mathbf{r})\sigma^2 + \cdots \\ &\equiv m_0 + m_1\sigma + m_2\sigma^2 + \cdots \end{aligned}$$

  where $m_j = \mathbf{l}^T\mathbf{A}^j\mathbf{r} \quad \text{for} \quad j = 0, 1, 2, \ldots$ are called moments (or markov parameters).

- Padé approximation

$$H(s_0+\sigma) = H_n(s_0+\sigma) + \mathcal{O}(\sigma^{2n})$$

Padé approximation and moment-matching, cont'

$$H(s_0+\sigma)Q_n(\sigma) \cong P_{n-1}(\sigma),$$

by comparing the coefficient of σ^k terms for $k = 0, 1, \ldots, 2n-1$, we have

$$\begin{bmatrix} m_0 & m_1 & \cdots & m_{n-1} \\ m_1 & m_2 & \cdots & m_n \\ \vdots & \vdots & \cdots & \vdots \\ m_{n-1} & m_n & \cdots & m_{2n-2} \end{bmatrix} \begin{bmatrix} b_n \\ b_{n-1} \\ \vdots \\ b_1 \end{bmatrix} = - \begin{bmatrix} m_n \\ m_{n+1} \\ \vdots \\ m_{2n-1} \end{bmatrix}$$

where the coefficient matrix is the **Hankel matrix** $\mathbf{M}_n$, and

$$\begin{cases} a_0 & = & m_0 \\ a_1 & = & m_0 b_1 + m_1 \\ & \vdots & \\ a_{n-1} & = & m_0 b_{n-1} + m_1 b_{n-2} + \cdots + m_{n-2} b_1 + m_{n-1} \end{cases}$$

Padé approximation and moment-macthing, cont'

$\Rightarrow$ Asymptotic Waveform Evaluations (AWE) techniques.

`[Pillage & Rohrer,'90]`
`[Chiprout & Nakhla,'94]`

However, $\underline{\mathbf{M}_n \text{ is generally very ill-conditioned!}}$

For example

$$
\begin{array}{ll}
n = 2 & \text{cond}(\mathbf{M}_2) = 2.62 \\
n = 3 & \text{cond}(\mathbf{M}_3) = 5.4 \times 10^3 \\
n = 4 & \text{cond}(\mathbf{M}_4) = 1.13 \times 10^9 \\
n = 6 & \text{cond}(\mathbf{M}_6) = 1.21 \times 10^{17}
\end{array}
$$

Krylov subspaces

- *Right* Krylov subspace
  $\mathcal{K}_n(\mathbf{A}, \mathbf{r}) = \text{span}\{\, \mathbf{r}, \mathbf{A}\mathbf{r}, \mathbf{A}^2\mathbf{r}, \ldots, \mathbf{A}^{n-1}\mathbf{r} \,\}$
- *Left* Krylov subspace
  $\mathcal{K}_n(\mathbf{A}^T, \mathbf{l}) = \text{span}\{\, \mathbf{l}, \mathbf{A}^T\mathbf{l}, (\mathbf{A}^T)^2\mathbf{l}, \ldots, (\mathbf{A}^T)^{n-1}\mathbf{l} \,\}$
- Krylov subspace and Hankel matrix $\mathbf{M}_n$

$$\begin{bmatrix} \mathbf{l}^T \\ \mathbf{l}^T\mathbf{A} \\ \vdots \\ \mathbf{l}^T\mathbf{A}^{n-1} \end{bmatrix} \cdot \begin{bmatrix} \mathbf{r} & \mathbf{A}\mathbf{r} & \cdots & \mathbf{A}^{n-1}\mathbf{r} \end{bmatrix} = \begin{bmatrix} \mathbf{l}^T\mathbf{r} & \mathbf{l}^T\mathbf{A}\mathbf{r} & \cdots & \mathbf{l}^T\mathbf{A}^{n-1}\mathbf{r} \\ \mathbf{l}^T\mathbf{A}\mathbf{r} & \mathbf{l}^T\mathbf{A}^2\mathbf{r} & \cdots & \mathbf{l}^T\mathbf{A}^{n}\mathbf{r} \\ \vdots & \vdots & \cdots & \vdots \\ \mathbf{l}^T\mathbf{A}^{n-1}\mathbf{r} & \mathbf{l}^T\mathbf{A}^{n}\mathbf{r} & \cdots & \mathbf{l}^T\mathbf{A}^{2n-2}\mathbf{r} \end{bmatrix}$$

$$= \begin{bmatrix} m_0 & m_1 & \cdots & m_{n-1} \\ m_1 & m_2 & \cdots & m_n \\ \vdots & \vdots & \cdots & \vdots \\ m_{n-1} & m_n & \cdots & m_{2n-2} \end{bmatrix} = \mathbf{M}_n$$

Basis Vectors of Krylov subspaces

Key issue: Krylov subspaces provide the desired information, but the vectors

$$\{\, \mathbf{A}^j \mathbf{r} \,\} \qquad \text{and} \qquad \{\, (\mathbf{A}^T)^j \mathbf{l} \,\}$$

are unstable as basis vectors.

Question: How to construct more stable basis vectors

$$\{\, \mathbf{v}_k \,\} \qquad \text{and} \qquad \{\, \mathbf{w}_j \,\}$$

such that

$$\mathcal{K}_n(\mathbf{A}, \mathbf{r}) = \text{span}\{\, \mathbf{v}_1, \mathbf{v}_2, \ldots, \mathbf{v}_n \,\}$$

and

$$\mathcal{K}_n(\mathbf{A}^T, \mathbf{l}) = \text{span}\{\, \mathbf{w}_1, \mathbf{w}_2, \ldots, \mathbf{w}_n \,\}$$

Solution: Lanczos process is an elegant way to generate the desired basis vectors `[Lanczos,'50]`.

Unsymmetric Lanczos procedure = Krylov subspace+TSMGS

(1) $\rho_1 = \|\mathbf{r}\|_2$, $\eta_1 = \|\mathbf{l}\|_2$

(2) $\mathbf{v}_1 = \mathbf{r}/\rho_1$, $\mathbf{w}_1 = \mathbf{l}/\eta_1$

(3) **for** $k = 1, 2, \ldots, n$ **do**

(4) $\quad \delta_k = \mathbf{w}_k^{\mathrm{T}} \mathbf{v}_k$

(5) $\quad \alpha_k = \mathbf{w}_k^{\mathrm{T}} \mathbf{A} \mathbf{v}_k / \delta_k$

(6) $\quad \beta_k = (\delta_k / \delta_{k-1}) \eta_k$

(7) $\quad \gamma_k = (\delta_k / \delta_{k-1}) \rho_k$

(8) $\quad \mathbf{v} = \mathbf{A}\mathbf{v}_k - \mathbf{v}_k \alpha_k - \mathbf{v}_{k-1} \beta_k$

(9) $\quad \mathbf{w} = \mathbf{A}^{\mathrm{T}} \mathbf{w}_k - \mathbf{w}_k \alpha_k - \mathbf{w}_{k-1} \gamma_k$

(10) $\quad \rho_{k+1} = \|\mathbf{v}\|_2$

(11) $\quad \eta_{k+1} = \|\mathbf{w}\|_2$

(12) $\quad \mathbf{v}_{k+1} = \mathbf{v}/\rho_{k+1}$

(13) $\quad \mathbf{w}_{k+1} = \mathbf{w}/\eta_{k+1}$

A fundamental tool in numerical analysis, particularly, for large scale matrix computations.

Unsymmetric Lanczos: governing relations

- Lanczos process in matrix-vector form

$$\begin{aligned} \mathbf{A}\mathbf{V}_n &= \mathbf{V}_n\mathbf{T}_n + \rho_{n+1}\mathbf{v}_{n+1}\mathbf{e}_n^T, \\ \mathbf{A}^T\mathbf{W}_n &= \mathbf{W}_n\tilde{\mathbf{T}}_n + \eta_{n+1}\mathbf{w}_{n+1}\mathbf{e}_n^T, \end{aligned}$$

where $\mathbf{T}_n$ and $\tilde{\mathbf{T}}_n$ are the tridiagonal matrices

$$\mathbf{T}_n = \begin{bmatrix} \alpha_1 & \beta_2 & & \\ \rho_2 & \alpha_2 & \ddots & \\ & \ddots & \ddots & \beta_n \\ & & \rho_n & \alpha_n, \end{bmatrix} \qquad \tilde{\mathbf{T}}_n^T = \begin{bmatrix} \alpha_1 & \gamma_2 & & \\ \eta_2 & \alpha_2 & \ddots & \\ & \ddots & \ddots & \gamma_n \\ & & \eta_n & \alpha_n \end{bmatrix}$$

- $\tilde{\mathbf{T}}_n^T = \Delta_n\mathbf{T}_n\Delta_n^{-1}$
- Lanczos vectors

$$\begin{aligned} \mathbf{V}_n &= \begin{bmatrix} \mathbf{v}_1 & \mathbf{v}_2 & \cdots & \mathbf{v}_n \end{bmatrix} \quad \rightarrow \quad \text{span}\{\mathbf{V}_n\} = \mathcal{K}_n(\mathbf{A}, \mathbf{r}) \\ \mathbf{W}_n &= \begin{bmatrix} \mathbf{w}_1 & \mathbf{w}_2 & \cdots & \mathbf{w}_n \end{bmatrix} \quad \rightarrow \quad \text{span}\{\mathbf{W}_n\} = \mathcal{K}_n(\mathbf{A}^T, \mathbf{l}) \end{aligned}$$

- Biorthogonality

$$\mathbf{W}_n^T \mathbf{V}_n = \Delta_n = \mathrm{diag}(\delta_k),$$

  and $\mathbf{W}_n^T \mathbf{v}_{n+1} = 0$ and $\mathbf{w}_{n+1}^T \mathbf{V}_n = 0$

- Projection

$$\mathbf{W}_n^T \mathbf{A} \mathbf{V}_n = \Delta_n \mathbf{T}_n$$

If the Lanczos process is carried to the end, then

$$\mathbf{V}_N^{-1} \mathbf{A} \mathbf{V}_N = \mathbf{T}_N,$$

Reduced-order modeling by Lanczos

- Let $\mathbf{r} = \mathbf{v}_1 \rho_1$ and $\mathbf{l}^T = \mathbf{w}_1^T \eta_1$

$$\begin{aligned} H(s_0+\sigma) &= \mathbf{l}^T(\mathbf{I}-\sigma\mathbf{A})^{-1}\mathbf{r} = (\mathbf{l}^T\mathbf{r})\,\mathbf{e}_1^T(\mathbf{I}-\sigma\mathbf{T}_N)^{-1}\mathbf{e}_1 \\ &= (\mathbf{l}^T\mathbf{r})\,\frac{\det(\mathbf{I}-\sigma\mathbf{T}'_N)}{\det(\mathbf{I}-\sigma\mathbf{T}_N)} = \frac{\text{zero}}{\text{pole}} \text{ representation} \end{aligned}$$

- Define the n-th ROM of transfer function

$$H_n(s_0+\sigma) = (\mathbf{l}^T\mathbf{r})\,\mathbf{e}_1^T(\mathbf{I}-\sigma\mathbf{T}_n)^{-1}\mathbf{e}_1$$

where

$$\mathbf{T}_N = \begin{array}{cc} & n \\ n & \begin{pmatrix} \mathbf{T}_n & \\ & \ddots \end{pmatrix} \end{array}$$

- Question: *What is $H_n(s_0+\sigma)$?*

What is $H_n(s_0 + \sigma)$?

- Lanczos-Padé connection

  Theorem. $H_n(s_0 + \sigma)$ is the Padé approximation of $H(s_0 + \sigma)$.

- Lanczos-Padé connection

  [`Gragg,'74, Gragg & Lindquist,'83`]

- Krylov subspace, moments matching and applications to ROM

  [`De Villemagen & Skelton,'87`]

  [`Craig, Hale & Su,'88--'92`]

  [`Feldman & Freund,'94`] (PVL)

  [`Gallivan, Grimme & Van Dooren,'94`]

  [`Bai & Ye,'97`]

Example: PEEC circuit

A 3D electromagnetic problem modeled via partial element equivalent circuit (PEEC) simulation `[Ruehli,'94]`

$|H(s)|$ and $|H_{60}(s)|$:

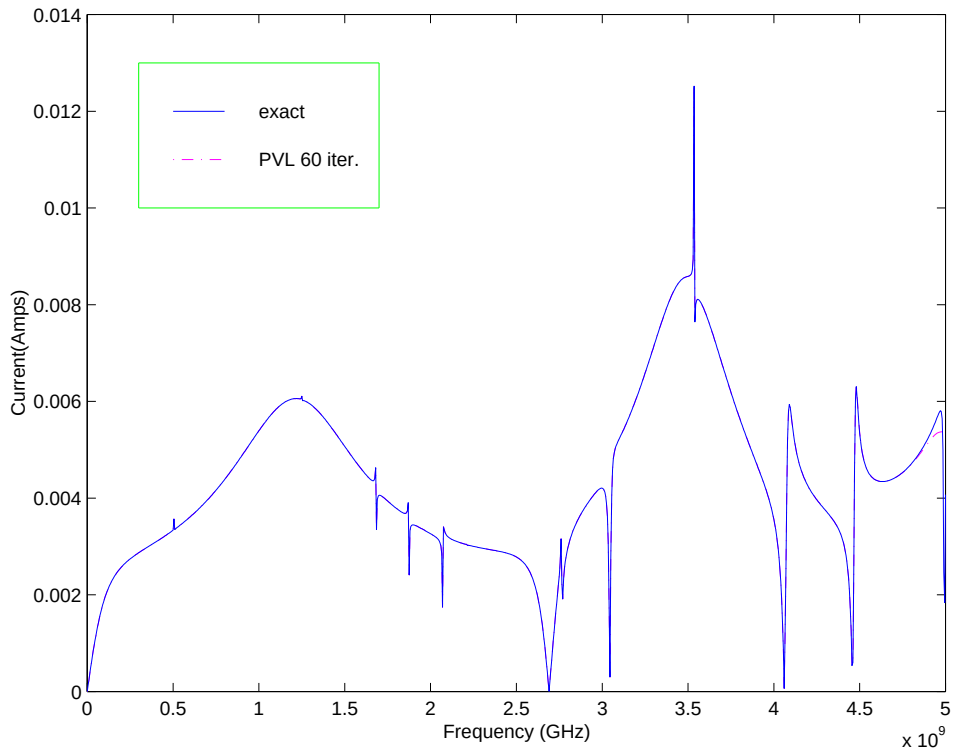

ROM in time domain

Linear dynamical system:

$$\begin{cases} \mathbf{C}\dot{\mathbf{x}}(t) + \mathbf{G}\mathbf{x}(t) &= \mathbf{B}\,\mathbf{u}(t), \\ \mathbf{y}(t) &= \mathbf{L}^T\mathbf{x}(t), \end{cases}$$

Let $\mathbf{A} = -(\mathbf{G} + s_0\mathbf{C})^{-1}\mathbf{C}$ and $\mathbf{R} = (\mathbf{G} + s_0\mathbf{C})^{-1}\mathbf{B}$, then yield the "shift-and-invert" system

$$\begin{cases} -\mathbf{A}\dot{\mathbf{x}}(t) + (\mathbf{I} + s_0\mathbf{A})\mathbf{x}(t) &= \mathbf{R}\,\mathbf{u}(t), \\ \mathbf{y}(t) &= \mathbf{L}^T\mathbf{x}(t), \end{cases}$$

Let

$$\mathbf{x}(t) \cong \mathbf{V}_n\mathbf{z}(t),$$

then the approximate system

$$\begin{cases} -\mathbf{A}\mathbf{V}_n\dot{\mathbf{z}}(t) + (\mathbf{I} + s_0\mathbf{A})\mathbf{V}_n\mathbf{z}(t) &= \mathbf{R}\,\mathbf{u}(t), \\ \tilde{\mathbf{y}}(t) &= \mathbf{L}^T\mathbf{V}_n\mathbf{z}(t). \end{cases}$$

Multiplying $\mathbf{W}_n^T$ from the left, we have

$$\left\{ \begin{array}{rcl} -\mathbf{W}_n^T\mathbf{A}\mathbf{V}_n\dot{\mathbf{z}}(t) + \mathbf{W}_n^T(\mathbf{I} + s_0\mathbf{A})\mathbf{V}_n\mathbf{z}(t) & = & \mathbf{W}_n^T\mathbf{R}\,\mathbf{u}(t), \\ \tilde{\mathbf{y}}(t) & = & \mathbf{L}^T\mathbf{V}_n\mathbf{z}(t). \end{array} \right.$$

n-th reduced-order model:

$$\left\{ \begin{array}{rcl} -\mathbf{T}_n\dot{\mathbf{z}}(t) + (\mathbf{I}_n + s_0\mathbf{T}_n)\mathbf{z}(t) & = & \mathbf{R}_n\mathbf{u}(t), \\ \tilde{\mathbf{y}}(t) & = & \mathbf{L}_n^T\mathbf{z}(t). \end{array} \right.$$

Property of LS: stability

- A linear(ized) system is **stable**
  - if all the poles p_j of $H(s)$ lie in
    $$\mathcal{C}_- := \{\, s \in \mathcal{C} \mid \Re(s) < 0 \,\}$$
    and
  - if all pole s of $H(s)$ on the imaginary axis, $\Re(s) = 0$, are simple, i.e.,
    $$H(s) \cong \frac{\kappa_j}{s - p_j} \qquad \text{as} \qquad s \to p_j$$
- This guarantees that, in the time domain,
  $$\exp(p_j t) \quad \text{remains bounded as} \quad t \to \infty$$

A stable system is a dynamic system with a bounded response to a bounded input.

Property of LS: passivity and positive realness

A (linear or nonlinear) system is called **passive** if it is incapable of generating energy and can only absorb energy form the sources used to excited it. For example, RLC circuits are passive. Mathematically,

$$\int_0^T y(t) \cdot u(t) dt \geq 0, \qquad \forall\ T \geq 0$$

By Parseval's identity,

Passivity = $H(s)$ is **Positive Real**

Positive real

A function $f : \mathcal{C} \mapsto \mathcal{C} \cup \{\infty\}$ is called **positive real** if

(i) f is analytic in $\mathcal{C}_+ \equiv \{s \in \mathcal{C}, \Re(s) > 0\}$;

(ii) $f(\bar{s}) = \overline{f(s)}$ for all $s \in \mathcal{C}$;

(iii) $\Re(f(s)) \geq 0$ for all $s \in \mathcal{C}_+$.

Positive realness of a rational function

Using standard results from complex analysis, such as the maximum modulus theorem, one readily obtains the following well-known conditions for a rational function to be positive real;

Theorem: Let f be a rational function.

a) If f is positive real, then it has no poles and zeros in $\mathcal{C}_+$ and any possible pole and zero on the imaginary axis $(\text{including } s = \infty)$ is simple.

b) The function f is positive real if, and and if, it has no poles in $\mathcal{C}_+$ and

$$\Re\left(f(\mathtt{i}\,\omega)\right) \geq 0 \quad \text{for all} \quad \omega \in \mathcal{R}.$$

References: [Anderson and Vongpanitlerd'73], [Boyd *et al*'94], ...

Further reading

The above presentation is based on the following introductory survey:

- Z. Bai, Krylov subspace techniques for reduced-order modeling of large-scale dynamical systems, Appl. Numer. Math. 43:9-44, 2002

It is available on the class website. The basic implementation of some methods and test data discussed in the survey paper can be found in

- http://www.cs.ucdavis.edu/∼bai/ROMmatlab

A graduate textbook on the subject is published by SIAM in 2005:

- A. C. Antoulas, Approximation of Large-Scale Dynamical Systems, SIAM Press, 2005